npj | climate and atmospheric science

Article

Published in partnership with CECCR at King Abdulaziz University

https://doi.org/10.1038/s41612-026-01328-5

A super-resolution framework for downscaling machine learning weather prediction toward 1-km air temperature

Check for updates

Hyebin Park[1], Seonyoung Park[1] ✉, Daehyun Kang[2] ✉ & Jeong-Hwan Kim[2]

Artificial intelligence has improved the accuracy and efficiency of weather forecasting, surpassing traditional numerical weather prediction models. However, the coarse spatial resolution of global weather forecasting systems limits their ability to capture fine-scale surface heterogeneity and localized extremes, particularly in regions with complex terrain or urban heat island effects. Here, we introduce SR-Weather, a deep learning-based super-resolution framework that converts coarse 0.25° forecasts into 1-km surface air temperature fields using MODIS-derived temperature targets and high-resolution auxiliary inputs. SR-Weather outperforms existing super-resolution methods by explicitly incorporating spatial context, such as topography, impervious surface fraction, and seasonal climatology maps of air temperature. When SR-Weather was applied to the FuXi global weather forecast, the 7-day forecast error in South Korea decreased by more than 20%, which was comparable to the 1-day forecast error from low-resolution prediction using simple spatial interpolation. In addition, SR-Weather effectively reconstructs missing pixels in MODIS-derived air temperature maps under heavy cloud contamination by leveraging auxiliary variables and climatologically smoothed fields. Although validated over South Korea, the framework relies on globally available MODIS products and minimal auxiliary inputs, making it feasible to retrain for other regions. These results indicate that SR-Weather is a scalable and high-fidelity tool for enhancing machine learning-based weather forecasts at fine spatial scales.

With more frequent localized weather and climate extremes due to urbanization, there is an increasing demand for high-resolution weather forecasts in a rapidly changing climate[1–3]. Finer-scale phenomena beyond the numerical weather prediction (NWP) model grid size, such as convection, microphysics, and turbulence, have been represented using subgrid-scale parameterizations, which constitute one of the major sources of uncertainty and error in short-range forecasts[4]. Current operational weather forecasts have improved horizontal resolution to reduce model errors and enhance the usability of forecast outputs. For example, a global storm-resolving simulation project was conducted over 40 days, with grid spacings between 2.5 and 4 km[5]. However, storm-resolving models are computationally expensive and often unstable for operational forecasting. Therefore, regional climate models are often employed to downscale large-scale flows because they can explicitly simulate convection[6–8].

Current NWP models can produce high-resolution forecasts at the kilometer scale; however, owing to limitations in computational resources and algorithmic complexity, their forecast lead times are generally restricted to a few days. For example, the Korea Meteorological Administration (KMA) developed the Local Data Assimilation and Prediction System (LDAPS) and the Regional Data Assimilation and Prediction System (RDAPS) in 2010[9]. LDAPS (RDAPS) can generate 48-hour (120-hour) forecast simulations at 1.5 km (3 km) spatial resolution. In the United States, the High-Resolution Rapid Refresh (HRRR) model provides short-term forecasts at a 3 km resolution with a lead time of up to 48 h[10]. In Germany, the Consortium for Small-Scale Modeling–Deutsche Edition (COSMO-DE) model produces forecasts at a resolution of 2.8 km for up to 45 h[11]. Likewise, operational NWP systems still do not deliver kilometer-scale forecasts at medium-range lead times (e.g., 1 km resolution for 15 days or longer), as the computational cost of high-resolution predictions through numerical simulation remains prohibitive. NWP models are less efficient in fully exploiting land surface information that supports land–atmosphere coupling[12]. Consequently, there is a growing demand for accurate, high-resolution medium-range forecasts that effectively capture localized extreme events and urban heat island effects.

[1]Department of Applied Artificial Intelligence, Seoul National University of Science and Technology, Seoul, South Korea. [2]Center for Climate and Carbon Cycle Research, Korea Institute of Science and Technology, Seoul, South Korea. ✉e-mail: sypark@seoultech.ac.kr; dkang@kist.re.kr

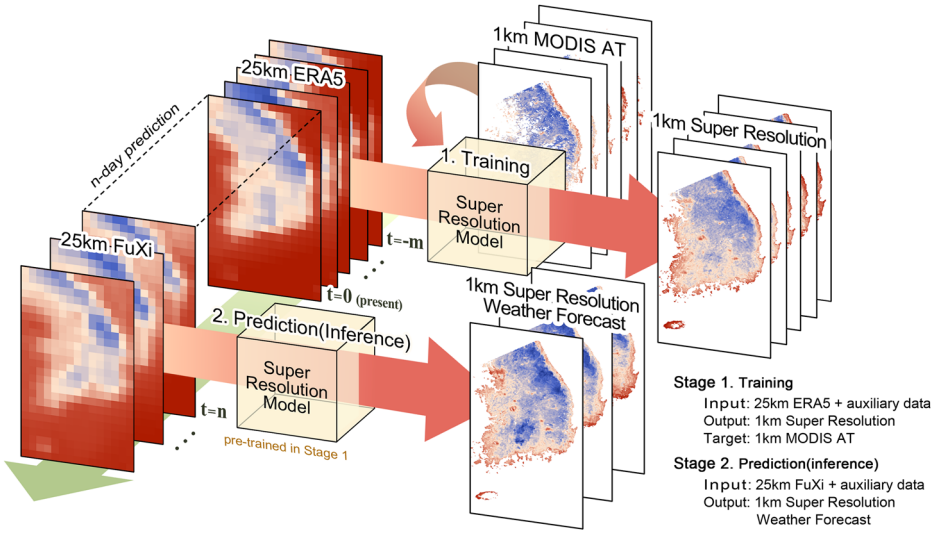

Fig. 1 | The Super-resolution framework. (1) In the training stage, the network is trained using 0.25° ERA5 2 m air temperature (T2M) as input, with MODIS-derived 1 km air temperature as the target, incorporating high-resolution auxiliary predictors (digital elevation model, impervious surface fraction, seasonal climatology map of air temperature). (2) In the prediction stage, the trained model receives 0.25° FuXi forecast fields as input, together with the same auxiliary predictors, to produce 1 km high-resolution air temperature forecasts. The figures were generated using Adobe Photoshop and Microsoft PowerPoint, and the maps were generated using the Python Matplotlib (version 3.7.5; https://matplotlib.org).

Deep learning–based weather prediction (DLWP) techniques have emerged as a promising complement to traditional NWP, offering substantial gains in computational efficiency while achieving competitive predictive skill when trained on reanalysis data. Recent studies using ERA5 data have enabled the development of global forecasting models that achieve competitive results at substantially reduced computational costs. There has been tremendous progress in developing DLWP models since Pangu-Weather and GraphCast demonstrated forecast accuracy surpassing that of the operational physics-based Integrated Forecast Systems (IFS) of the European Centre for Medium-Range Weather Forecast (ECMWF), which is based on traditional NWP[13,14]. The FuXi model also leverages extensive high-dimensional meteorological datasets from ERA5 to generate forecasts with lead times of up to 15 days at a spatial resolution of 0.25°[15]. Nonetheless, owing to the inherent limitations of horizontal resolution in the training dataset (i.e., ERA5), current DLWP models remain confined to producing forecasts at 0.25° resolution (~ 25 km). Downscaling the 25 km DLWP forecasts to a finer resolution can further exploit accurate global weather forecasts to meet the demand for high-resolution regional forecasts.

Downscaling through deep learning generally requires ground-truth data with high-resolution pixel values. To meet this requirement, CorrDiff employed 2 km high-resolution regional climate model data from the Weather Research and Forecasting (WRF) system to downscale the 25 km resolution data as input[16]. However, downscaling toward kilometer-scale NWP is inevitably exposed to systematic model errors, resulting in significant uncertainties, particularly over land surfaces. The use of in situ observations is also limited because they are often sparse and only locally representative[17]. Satellite imagery provides continuous, high-resolution data in both spatial and temporal domains, thereby enabling the extraction of quantitative information across entire regions. Numerous recent studies have used satellite imagery to downscale diverse coarse-resolution datasets, thereby enhancing the spatial representation of key environmental variables. For instance, Meng et al.[18] adopted the 1 km land surface temperature (LST) product derived from the MERSI sensor aboard the FY-3D satellite as a high-resolution reference dataset, thereby systematically bias-correcting concurrent 25 km MWRI microwave observations and producing globally gap-free 1 km LST composites. Zou et al.[19] applied a super-resolution network that increased the 0.25° AMSR2 microwave sea surface temperature (SST) to 0.02° resolution using VIIRS SST infrared imagery as a high-resolution predictor. Consequently, satellite-derived high-resolution products can serve as valid ground-truth targets for deep learning–based downscaling, thereby overcoming the spatial sparsity of in situ observations.

In this study, we propose SR-Weather, a two-stage deep learning framework for downscaling low-resolution forecast data to 1 km air temperature fields. The framework integrates a deep learning–based global weather forecast into satellite-based air temperature via a super-resolution method, which exploits the advantages of both the accuracy of the DLWP and the 1 km high-resolution of satellite observations. Here, we employ FuXi as the low-resolution input forecast because FuXi forecasts demonstrate higher accuracy than GraphCast in medium-range forecasts beyond the 7-day lead for multiple variables, including 2-meter temperature (T2M), while their accuracy is comparable within a 7-day lead[15]. Our methodology comprises two main stages: (1) a super-resolution model is trained with ERA5 data at 0.25° resolution as the input and satellite-based air temperature data at 1 km resolution as the target; and (2) the trained model is subsequently applied to the FuXi medium-range forecast data, transforming 0.25° low-resolution forecasts into 1 km high-resolution forecasts (Fig. 1).

Results

SR-Weather is a deep learning–based super-resolution model designed to enhance coarse-resolution weather forecasts at fine spatial scales. In the super-resolution framework, high-resolution auxiliary predictors such as the digital elevation model (DEM), impervious surface fraction (Imp), and seasonal climatology maps (SCM) of air temperature, are used to enrich the spatial context (See Methods for the details). The SCM provides seasonally averaged spatial anomalies to capture local temperature variations. To evaluate its effectiveness, we benchmarked SR-Weather against three established super-resolution architectures: the Hybrid Attention Transformer (HAT)[20], the Super-Resolution Generative Adversarial Network (SRGAN)[21], and the Squeeze-and-Excitation Super-Resolution Convolutional Neural Network (SE-SRCNN)[22]. Details of the model configuration and auxiliary inputs are provided in the Methods section.

ERA5 Super-resolution (Stage 1)

In stage 1, we built a model for downscaling task from daily-averaged 25 km ERA5 reanalysis to the concurrent 1 km MODIS-derived air temperature. The model's performance was evaluated by splitting the ERA5 dataset into training, validation, and test subsets. Data from 2001 to 2015 were used for model fitting, from 2016 to 2017 for hyperparameter tuning and early stopping, and from 2018 to 2020 for independent testing. The evaluation was performed using temperature anomalies after removing the long-term climatology. To remove the seasonal cycle, we first calculated the multi-year climatological mean for each calendar day over the Korean Peninsula (2000–2020). The resulting day-of-year climatology was then smoothed with a five-day moving window centered on each date, and this smoothed climatology was subtracted from the raw daily temperature series to produce daily temperature anomalies. We compared our SR-Weather framework

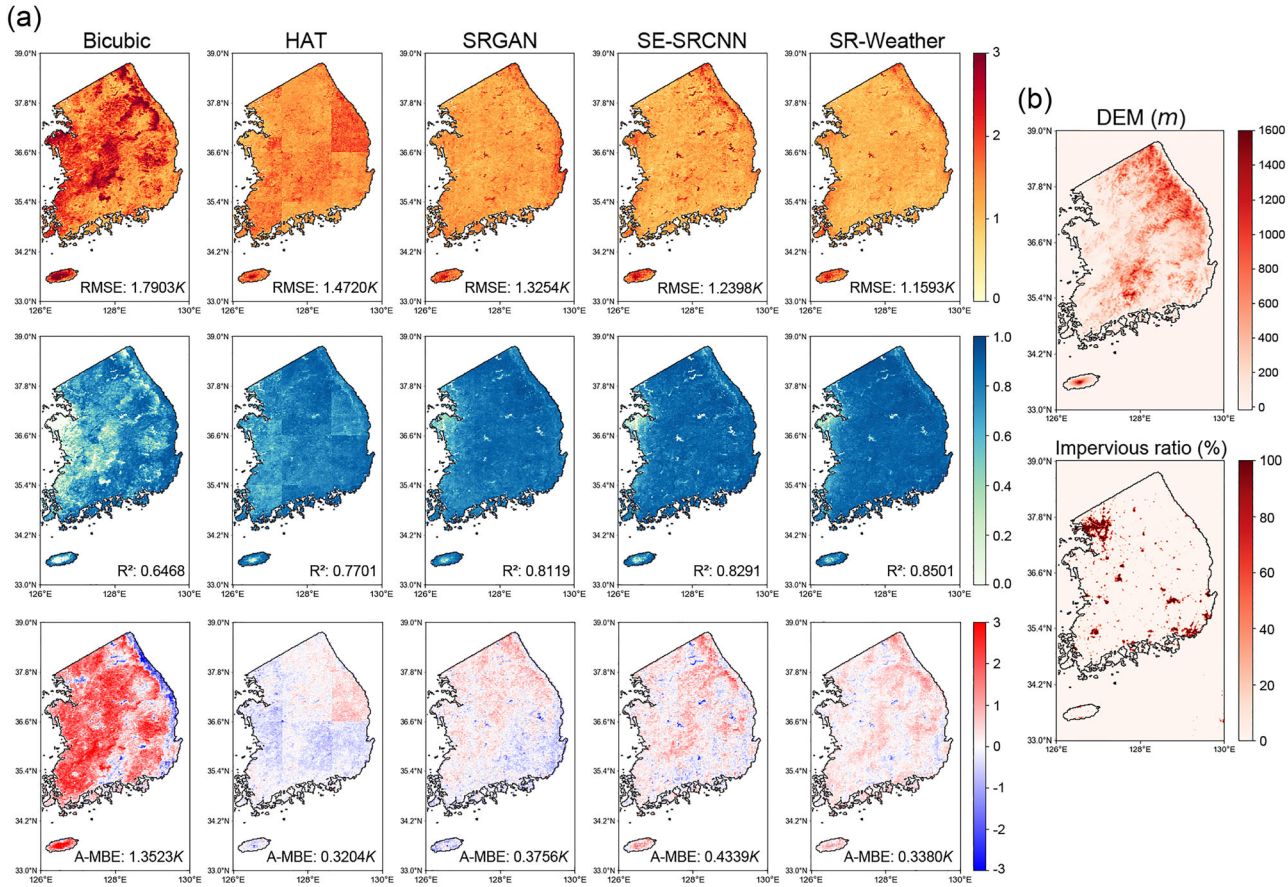

Fig. 2 | Spatial distribution of model verification and information for auxiliary predictors. a Verification maps for bicubic interpolation, Hybrid Attention Transformer (HAT), Super-Resolution GAN (SRGAN), Squeeze-and-Excitation SRCNN (SE-SRCNN), and SR-Weather applied to ERA5 test dataset over the Korean Peninsula. From top to bottom, the panels display root mean square error (RMSE, K), coefficient of determination (R^2), and mean bias error (MBE, K), each computed against MODIS air temperature. Numbers annotated in the panels indicate the spatial averages of RMSE, R^2, and absolute MBE (A-MBE) across the domain. **b** High-resolution auxiliary predictors: digital elevation model (DEM, m; top) and impervious surface fraction (Imp, %, bottom). The figures were generated using the Python Matplotlib (version 3.7.5; https://matplotlib.org).

with HAT, SRGAN, SE-SRCNN, and bicubic interpolation results from ERA5 T2M.

Figure 2 compares the spatial distributions of root mean square error (RMSE), coefficient of determination (R^2), and mean bias error (MBE) against MODIS AT. Relative to bicubic interpolation (RMSE = 1.79 K; R^2 = 0.65; A-MBE = 1.35 K), all learning-based super-resolution schemes exhibit substantial gains in accuracy and correlation. SR-Weather achieved the best performance for RMSE and R^2 (RMSE = 1.16 K, R^2 = 0.85), with a low bias (A-MBE = 0.34 K). This corresponds to improvements of 6–21% in RMSE and 3–10% in R^2, with A-MBE ranging from −6% to 21% compared with other SR models. HAT exhibited the least favorable overall performance (RMSE = 1.47 K; R^2 = 0.77; A-MBE = 0.32 K) and displayed pronounced grid-like tiling artifacts along the boundaries between output patches. The A-MBE map produced by the HAT reveals no coherent alignment with the underlying terrain or geographical features; instead it exhibits an irregular mosaic of over- and underestimation in patches with sharp discontinuities at the edges. This fragmentation arises from the model's exclusive reliance on coarse-resolution inputs without high-resolution auxiliary information, which limits spatial coherence over heterogeneous landscapes[23–25].

Beyond the patch-level inconsistencies observed in HAT, an additional challenge for GAN-based baselines arises from the quality of the ground truth. The sparse distribution of valid pixels within MODIS AT patches used as ground truth hampers the formation of coherent image structures[26]. Under this sparsity, the discriminator that compares generated outputs with the ground truth receives weak and spatially intermittent supervision. Adversarial signals are strongly attenuated, limiting their influence on learning. Thus, the key distinction lies in the generator architecture for enhancing spatial resolution. Compared with SRGAN (RMSE = 1.33 K; R^2 = 0.81; A-MBE = 0.38 K), SE-SRCNN performed better in RMSE and R^2 (RMSE = 1.24 K; R^2 = 0.83) but had a slightly higher A-MBE (0.43 K). While these metrics indicate superior overall performance for SE-SRCNN, it shows a relatively higher RMSE than SRGAN in the high-terrain regions, particularly on the northeastern side of the domain (Fig. 3). This discrepancy arises from the generator design. For the SRGAN generator, pixel shuffle is employed during the upsampling process to rearrange low-resolution feature maps into spatial coordinates, thereby capturing high-frequency details[27]. In contrast, SE-SRCNN inputs low-resolution temperature fields that have been pre-interpolated to high resolution via bicubic interpolation and computes channel-attention weights through global average pooling (GAP). Although this approach effectively incorporates global context, it averages pixel-level spatial information, limiting its ability to preserve fine spatial details[28].

Among the three baseline models, SE-SRCNN delivers a strong overall performance, but its ability to recover fine-scale structures deteriorates in regions with steep temperature gradients, such as high-elevation terrain (Fig. 3b). Therefore, for our final model, SR-Weather, we adopted SE-SRCNN and enhanced it with several improvements. SR-Weather retains the spatial predictors used in SE-SRCNN (DEM and Imp) and additionally incorporates SCM, while employing global max and min pooling along with GAP. These additions increase sensitivity to local extremes and improve the reconstruction of spatial heterogeneity, yielding

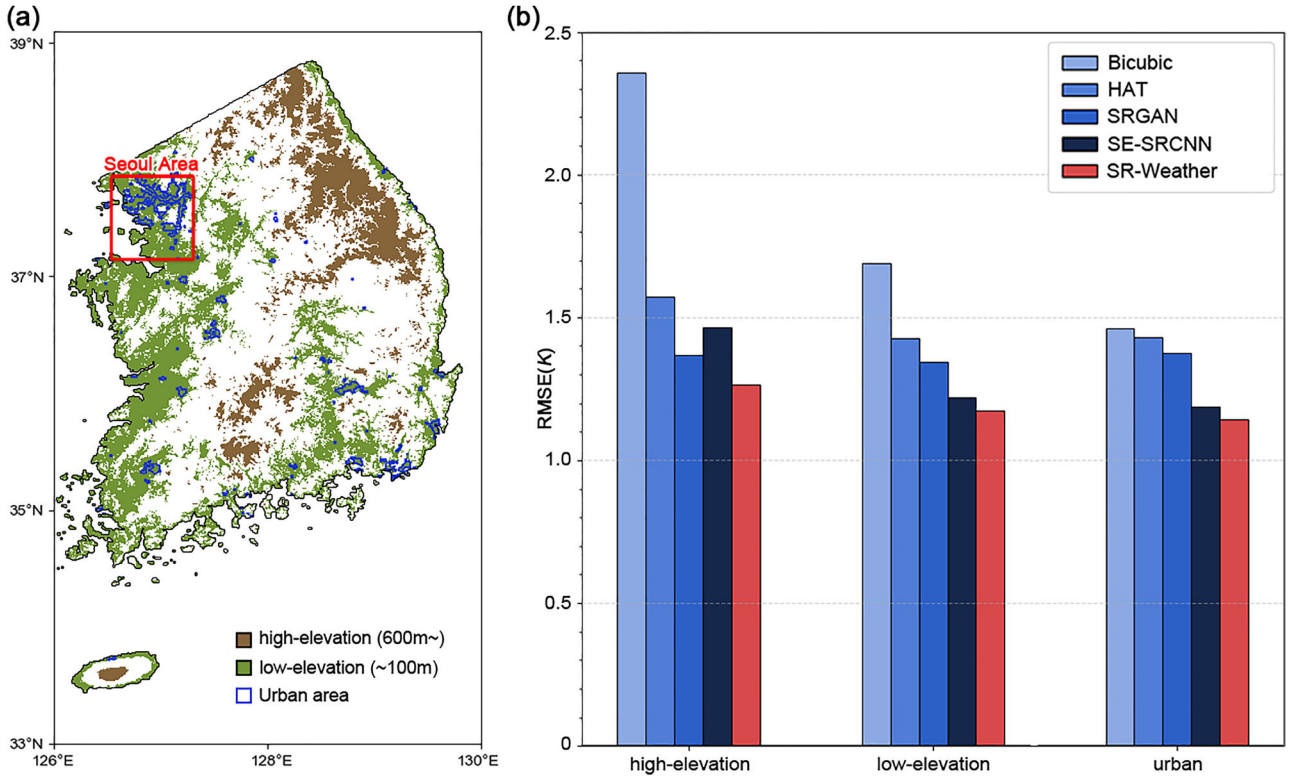

Fig. 3 | Terrain-dependent super-resolution performance. a The Korean Peninsula is divided into three terrain categories: high-elevation areas (> 600 m; brown shading), low-elevation areas (< 100 m; green shading), and urban areas (blue outlines). **b** Mean root-mean-square error (RMSE, K) values for bicubic interpolation, Hybrid Attention Transformer (HAT), Super-Resolution GAN (SRGAN), Squeeze-and-Excitation SRCNN (SE-SRCNN), and SR-Weather are evaluated separately for each terrain category. The figures were generated using the Python Matplotlib (version 3.7.5; https://matplotlib.org).

the best overall performance in terms of RMSE and R^2 while maintaining competitive bias.

Given notable model dependencies across regions with different terrain heights, Fig. 3 compares the RMSE performance of each model in low-elevation, high-elevation, and urban environments. Overall, the relative performance is consistent with domain-averaged accuracy, as shown in Fig. 2. Across all three regimes, models that leverage high-resolution auxiliary information (i.e., SRGAN, SE-SRCNN, and SR-Weather) outperform HAT and bicubic interpolation in RMSE. Improvements in the high-elevation and low-elevation regions appear to be associated with incorporating DEM, which provides a static orographic context and helps resolve elevation-dependent temperature contrasts. Performance gains in urban areas are linked to Imp, which encodes the built-up fraction and the associated urban heat signatures. As shown in the A-MBE map in Fig. 2, bicubic interpolation tends to underestimate temperatures in urban cores, whereas models that leverage high-resolution auxiliary information exhibit modest positive biases in these areas, plausibly reflecting the urban signal represented by Imp.

Consistent with the generator-level comparison, SE-SRCNN decreased RMSE by 9.2% in low-elevation areas and 13.6% in urban areas compared with SRGAN but showed 7.3% higher RMSE in high-elevation areas. SR-Weather effectively addressed the limitations of SE-SRCNN, resulting in the best performance, particularly in the high-elevation areas (13.7% RMSE decrease relative to SE-SRCNN) as well as in the other two regions. SR-Weather exhibited the highest predictive accuracy across all terrain types. Relative to bicubic interpolation, SR-Weather reduced RMSE by 46.4% in high-elevation areas, 30.6% in low-elevation areas, and 21.6% in urban areas, demonstrating its effectiveness in enhancing the spatial resolution of coarse temperature fields. These results indicate that directly conveying spatial context via SCM effectively captures fine-scale temperature variations.

Super-resolution on FuXi weather forecasts (Stage 2)

Based on the high performance of SR-Weather, we used the daily-averaged FuXi weather forecast field as an input to the pre-trained SR-Weather model from Stage 1. Figure 4 evaluates the prediction performance of bicubic interpolation, SRGAN, SE-SRCNN and SR-Weather against meteorological station observations from the Automated Synoptic Observing System (ASOS) and Automatic Weather Stations (AWS) within the valid-pixel domain of MODIS AT, assessing RMSE and R^2 as functions of lead time. Compared with bicubic interpolation, all deep learning–based super-resolution models that leverage high-resolution auxiliary data achieved substantial error reductions. The coarse 0.25° grid failed to capture fine-scale terrain and land cover heterogeneity at point-based weather stations, resulting in higher error relative to the observations (Fig. 5). In contrast, 1-km resolution outputs from the SR models accurately resolved fine-scale spatial heterogeneity of AT, which arises from variations such as topography and land use, thereby increasing agreement with station observations. By transforming low-resolution forecast fields into high-resolution estimates, the super-resolution models significantly reduced RMSE relative to station temperatures.

SR-Weather consistently achieved the lowest RMSE and highest R^2 across all lead times, demonstrating superior performance in real-time forecast tasks. Remarkably, the downscaling with SR-Weather from the FuXi 7-day lead forecast yielded a smaller RMSE than the bicubic interpolations applied to the FuXi 1-day lead forecast and the ground truth at 0.25° (i.e., ERA5). Notably, SR-Weather exhibited superior performance even under cloudy conditions, where MODIS AT data was unavailable during the training stage (Supplementary Fig. S1). This significant improvement highlights the necessity of SR-Weather for high-resolution weather forecasting. These findings indicate that the capabilities of SR-Weather extend beyond mere resolution enhancement, and the model effectively corrects forecast biases by integrating of 1 km terrain information.

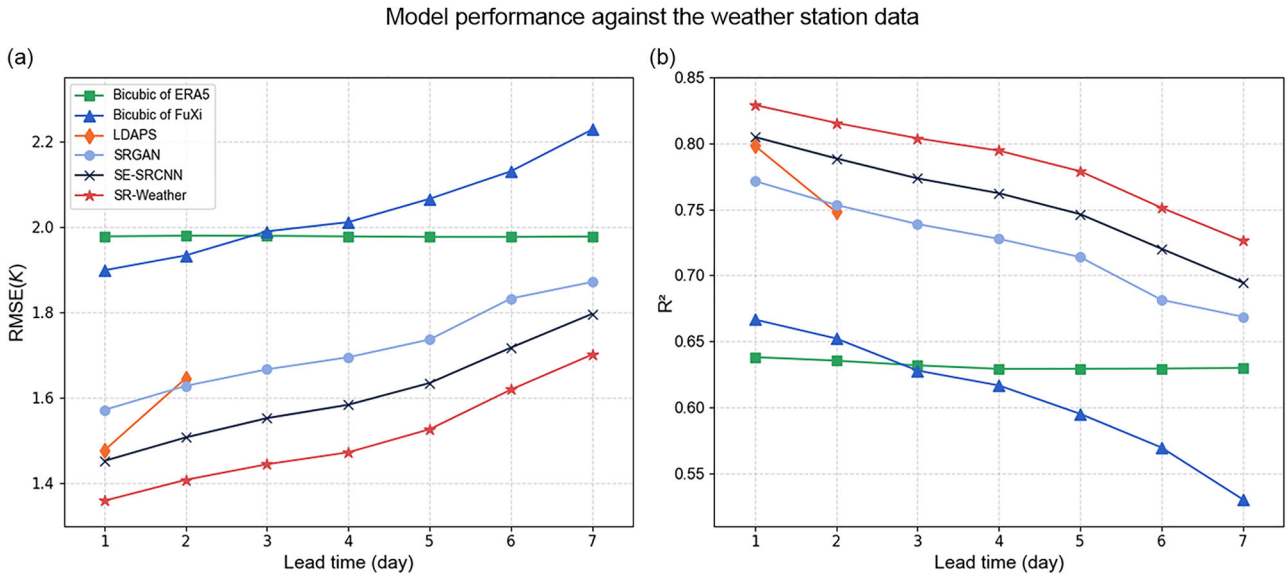

Fig. 4 | Lead time-dependent forecast evaluation of super-resolution models against station observations. Lead-time dependence of (**a**) root mean square error (RMSE, K; left) and (**b**) coefficient of determination (R^2; right) against ASOS/AWS observations within the MODIS AT valid-pixel domain for bicubic interpolation of ERA5, bicubic interpolation of FuXi, Local Data Assimilation and Prediction System (LDAPS), Super-Resolution GAN (SRGAN), Squeeze-and-Excitation SRCNN (SE-SRCNN), and SR-Weather. The range of verification period for ERA5 is progressively shifted by one day with increasing forecast lead time, which leads to minor differences in the scores. The figures were generated using the Python Matplotlib (version 3.7.5; https://matplotlib.org).

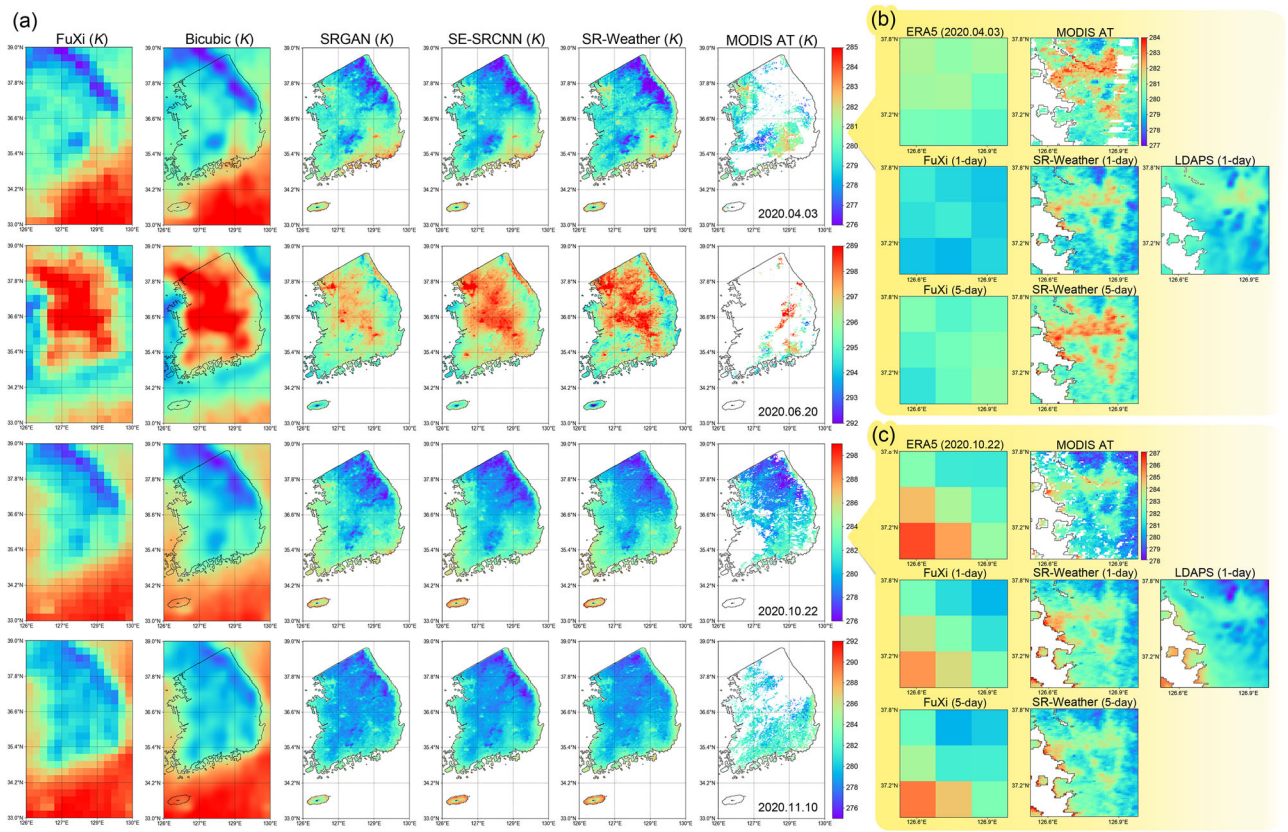

Fig. 5 | Spatial distribution of air temperature for FuXi and super-resolution results during the sampled days. a Resolution enhancement results of 3-day lead 0.25° FuXi forecasts upscaled to 1 km resolution for four representative dates (2020-04-03, 2020-06-20, 2020-10-22, and 2020-11-10). Columns 1–6 show, respectively: the original low-resolution FuXi forecasts, bicubic interpolation, Super-Resolution GAN (SRGAN), Squeeze-and-Excitation SRCNN (SE-SRCNN), the proposed SR-Weather outputs, and MODIS-derived air temperature observations for the target day. A red rectangular box in Fig. 3a indicates the Seoul Metropolitan Area, which is cropped and enlarged in panels (**b**, **c**). In (**b**, **c**), zoomed-in views over the Seoul metropolitan area for two of the dates shown in (**a**): 2020-04-03 and 2020-10-22, respectively. Each panel shows SR-Weather outputs using 1-day and 5-day lead FuXi forecasts as input, along with 1-day Local Data Assimilation and Prediction System (LDAPS) predictions, ERA5 reanalysis and MODIS-derived air temperature observations for reference. The figures were generated using the Python Matplotlib (version 3.7.5; https://matplotlib.org).

Furthermore, SR-Weather exhibited superior short-range forecasting skill compared with the operational LDAPS system. At a 1-day lead time, SR-Weather reduced RMSE by 0.12 K relative to LDAPS, and this margin increased to 0.24 K at a 2-day lead time. These findings demonstrate that deep learning–based super-resolution achieves forecast performance that is comparable to or superior to physics-based regional NWP models, offering systematic bias mitigation beyond simply enhancing spatial resolution. From a computational standpoint, SR-Weather is also substantially more efficient than LDAPS. A 36-hour LDAPS forecast is approximated to require on the order of $1.0–1.3 \times 10^7$ FLOPs per three-dimensional grid cell, and the total computational cost increases nearly proportionally with lead time owing to its fixed one-minute integration step. In contrast, the inference cost of SR-Weather is approximately 8.0×10^4 FLOPs per grid cell, resulting in a 100–150× reduction in computational expense while producing 1-km temperature fields. This disparity becomes even more pronounced for longer forecast ranges, underscoring the considerable computational advantages of SR-Weather for large-scale operational prediction systems and real-time weather applications.

Figure 5a presents 1 km reconstructions of 0.25° FuXi forecast temperature fields at a 3-day lead time for four case dates in 2020 (April 3, June 20, October 22, and November 10), selected from different seasons. In both the native FuXi output and its bicubic interpolation, characteristic urban heat island patterns were obscured, whereas all super-resolution methods faithfully reproduced urban heat island effects and topography-driven thermal heterogeneity. The SE-SRCNN-generated high-resolution fields appear uniformly smooth and visibly blurred, whereas the proposed SR-Weather restores missing temperature distributions from low-resolution forecasts with superior perceptual fidelity. Compared with MODIS-derived air temperature observations, SR-Weather demonstrated an enhanced ability to predict extreme temperatures. Whereas SRGAN and SE-SRCNN produce comparatively homogenized outputs, SR-Weather accurately captures localized temperature extrema, a capability afforded by integrating global min/max pooling alongside GAP within the channel-attention mechanism to ensure effective reflection of extreme-value information.

Figure 5b and 5c present detailed spatial images of FuXi and SR-Weather in the Seoul Metropolitan area across different lead times on two representative dates (April 3 and October 22, 2020). The results demonstrate that even for the same date, super-resolved fields vary with FuXi inputs rather than reproducing fixed patterns. This indicates that the model does not simply fit static auxiliary data such as SCM but instead leverages the auxiliary variables to inform the overall spatial anomaly distribution, allowing the outputs to adapt dynamically to the low-resolution air temperature inputs. SCM provides a stationary spatial context, whereas FuXi governs the time-varying anomaly patterns and amplitudes. When FuXi forecasts closely resembled the ERA5 reanalysis data, the corresponding high-resolution outputs also showed good agreement with the MODIS AT observations.

Although the SR outputs are less detailed than the native 1 km MODIS AT product, they effectively capture large-scale temperature patterns, such as urban heat islands. This region includes Seoul, the largest metropolitan area in South Korea, where urban areas consistently exhibit higher temperatures than surrounding regions. In both cases, elevated temperatures over urban areas were clearly represented in the super-resolution outputs, demonstrating the model's ability to capture persistent urban heat island effects. When compared with the 1-day LDAPS forecasts, LDAPS exhibited limitations in representing fine-scale urban and terrain-induced temperature structures, a constraint inherent to traditional physics-based NWP systems. In contrast, SR-Weather combined low-resolution forecasts with high-resolution auxiliary data to more clearly reconstruct localized warm anomalies and topography-driven temperature gradients, demonstrating superior capability in capturing spatial detail. In addition, the western part of the domain is adjacent to coastal areas, which typically remain cooler than inland regions during spring and summer but become relatively warmer during autumn and winter owing to oceanic thermal inertia. These results demonstrate the ability of the model to accurately reproduce region- and season-specific spatial temperature patterns.

Discussion

Accurate high-resolution weather forecasting remains a major challenge due to the coarse resolution of current global reanalysis and machine learning-based forecast models. State-of-the-art DLWP systems, such as FuXi, are limited by the 0.25° (about 25 km) horizontal resolution of their training data, which prevents them from fully capturing fine-scale surface heterogeneity and localized extremes. These limitations significantly reduce their applicability to regional-scale environmental monitoring, particularly in areas with complex terrain or urban heat island effects. To address this resolution gap, we developed SR-Weather, a two-stage super-resolution framework that transforms coarse 0.25° forecasts into 1 km air temperature fields by leveraging MODIS-derived temperature data and high-resolution auxiliary predictors. By enhancing the spatial resolution of deep learning-based forecasts, SR-Weather bridges the gap between global ML systems and localized NWP models. FuXi offers medium-range forecasts up to 15-days, but only at 25 km resolution, whereas operational regional NWP models such as LDAPS, HRRR, and COSMO-DE provide forecasts at 1–3 km resolution yet are limited to 2–5 days[9–11]. In contrast, SR-Weather achieves 1 km medium-range forecasts based on FuXi, providing extended temporal coverage with finer spatial detail in a way that neither approach can achieve on its own.

The proposed SR-Weather framework demonstrated marked improvements over conventional SR architectures, including SRGAN, SE-SRCNN, and HAT. The auxiliary predictors used in SR-Weather enable the model to learn localized thermal patterns, allowing accurate reconstruction of complex terrain- or urban-induced variations that are invisible to coarse-resolution models. Importantly, SR-Weather achieves a lower RMSE from a 7-day lead FuXi forecast than from a 1-day lead bicubic interpolation forecast, indicating not only improved spatial resolution but also enhanced bias correction capability. A notable strength of the SR-Weather framework is its use of climatologically smoothed SCM fields together with high-resolution auxiliary variables, which collectively help stabilize the reconstruction of temperature patterns when MODIS AT contains missing regions due to cloud contamination. These ancillary inputs mitigate uncertainties arising from missing target pixels and contribute to preserving spatial coherence in the reconstructed temperature fields. This is especially valuable for satellite-dependent forecasting systems, where real-time gaps caused by atmospheric obstructions are common. The capacity of SR-Weather to infer plausible temperature distributions in these regions suggests broader applicability in filling satellite data gaps.

Although our experiments focused on South Korea, this geographic constraint was chosen primarily to enable robust validation against dense in situ observations. Crucially, the SR-Weather framework is not region-specific. While in situ-optimized networks may offer better precision at collocated sites[29,30], our framework delivers full-field reconstruction, effectively bridging data-sparse regions using satellite-derived products. MODIS LST data are available globally, and the MODIS-to-AT conversion technique used in this study can be generalized with minimal auxiliary data requirements. Furthermore, the auxiliary predictors used in this study are derived from satellite-based observation datasets with global coverage, and the widespread availability of these inputs suggests that comparable models can be retrained for other regions. In the absence of a global weather forecast model with state-of-the-art kilometer-scale resolution, downscaling using the SR-Weather framework presents a computationally efficient and effective solution for various applications in the weather industry.

In addition, SR-Weather currently assumes static auxiliary inputs, such as impervious surface fraction and topography. This assumption reduces predictive accuracy in regions undergoing rapid land surface changes, such as urbanization or seasonal vegetation dynamics. To address this limitation, future work will explore integrating dynamic auxiliary datasets, such as real-time Normalized Difference Vegetation Index (NDVI) and urban

expansion indicators, to enhance the adaptability and predictive reliability of the model.

Methods

Study area

The Korean Peninsula exhibits a unique combination of geographical, topographic, and climatic interactions. Its landscape includes mountains, plains, and coastlines, with a distinct north–south orientation and sharp elevation differences between east and west[31,32]. Land use is equally diverse, spanning dense urban centers such as Seoul to rural regions dominated by agriculture and forests[33,34]. Surrounded by three seas, the peninsula is shaped by strong land–ocean interactions. It experiences a typical mid-latitude climate with four distinct seasons, marked by large temperature contrasts between summer and winter. These characteristics make the Korean Peninsula an ideal natural laboratory for testing the generalizability of temperature super-resolution models across diverse environmental conditions. Our study area was South Korea, where in situ observational data are available (Supplementary Fig. S2).

Deriving 1 km daily air temperature from MODIS LST

High-resolution daily mean air temperature data are required to enhance the spatial resolution of coarse daily temperature products. However, satellite-derived high-resolution daily mean air temperature products are currently unavailable. Therefore, following Yoo et al.[35], we transformed the 1 km MODIS land surface temperature (LST) from the MOD11A1 v061 product into the daily mean air temperature, MODIS AT[36,37]. To maximize coverage, we used Terra LST only, combining daytime and nighttime observations from both the previous day and the same day. As auxiliary predictors, we included incoming solar radiation, NDVI, latitude, longitude, digital elevation model (DEM), terrain aspect, and impervious surface fraction. Daily mean air temperatures from Automatic Weather Stations (AWS) served as training targets, whereas data from the Automated Synoptic Observing System (ASOS) were reserved for validation. The model, trained on AWS data and evaluated using ASOS data, achieved an RMSE of 1.22 K and R^2 of 0.95, substantially outperforming direct MODIS LST-derived means (RMSE = 4.13 K; R^2 = 0.47). Finally, the model was applied to generate a gridded MODIS AT dataset for 2000–2020.

Data

FuXi performs global weather forecasting at a spatial resolution of 0.25° and a temporal resolution of 6 h using an autoregressive architecture with more than 70 surface and upper-air meteorological variables derived from ERA5 reanalysis data collected at 6 h intervals between 1979 and 2017[15]. In T2M forecasting, FuXi outperformed conventional numerical weather prediction (NWP) and deep learning models, particularly at extended lead times. WeatherBench 2 provides FuXi T2M forecasts for 2020[38]. However, using data from a single year (2020) limits the availability of data for model training and validation. In this study, we developed a generalizable super-resolution model for T2M over South Korea based on 0.25° ERA5 T2M data and evaluated its performance using T2M forecasts generated by FuXi. We also used forecasts from KMA's high-resolution NWP system, LDAPS, as a comparison baseline to evaluate the performance of our model. LDAPS delivers T2M forecasts at approximately 1.5 km spatial resolution and 1-hour temporal resolution over the Korean Peninsula and provides short-range predictions out to 48 h.

A 1 km DEM and Imp data were used as common auxiliary inputs for both training and validation. The DEM was obtained by resampling the 2012 SRTM Void-Filled 3 arc-second dataset to a 1 km resolution[39]. For Imp, we reconstructed 1 km² grids by calculating the proportion of the urban class within each grid based on the 500 m MODIS Land Cover product (MCD12Q1 v061)[40,41]. The MODIS Land Cover product has been available annually since 2001, and for each forecast date, Imp data from the previous year were used as input. For training data from 2000 and 2001, Imp data from 2001 were used. In addition, we propose an SCM to provide seasonally invariant spatial temperature information.

SCM is a spatial temperature map derived from MODIS AT data averaged over 2000 to 2020. It was generated by averaging the temperatures across all years for each calendar day, resulting in 365 average temperature maps corresponding to each day of the year. Because MODIS satellite products frequently contain missing values due to atmospheric conditions such as cloud cover, we applied an 11-day moving average to smooth the data and correct for missing values (Equations (1)–(3)). This procedure also helps reduce potential biases associated with individual days by incorporating temporal context from surrounding dates. Here $T_{t,y,i,j}$ denotes the MODIS AT value for the day of year t (1-365), year y, and spatial coordinates (i, j); S_t is the result of moving average smoothing; B_t is the number of years with valid observations on day t (i.e., the number of non-missing values); and $I(T_{t,y,i,j})$ is an indicator function that returns 1 if $T_{t,y,i,j}$ is valid (i.e., not missing) and 0 otherwise.

$$Y = \{y \in Z | 2000 \le y \le 2020\} \tag{1}$$

$$B_{t,i,j} = \sum_{y \in Y} I\left(T_{t,y,i,j}\right),\ W^{(0)}_{t,i,j} = \sum_{y \in Y} T_{t,y,i,j} \cdot I\left(T_{t,y,i,j}\right) \tag{2}$$

$$\hat{B}^{(0)}_{t,i,j} = \sum_{k=-5}^{5} B_{t+k,i,j},\ S^{(0)}_{t,i,j} = \frac{\sum_{k=-5}^{5} W^{(0)}_{t+k,i,j}}{\hat{B}^{(0)}_{t,i,j}} \tag{3}$$

To further minimize missing values in the SCM dataset, we implemented an additional interpolation process. Because repeated smoothing over a broad temporal window can obscure day-specific temperature characteristics, an unsmoothed average temperature map $\hat{T}$ was first derived. This map was then combined with the moving average result S_t to calculate $W^{(n)}_t$ (Equations (4) and (5)): An 11-day moving average was subsequently reapplied to $W^{(n)}_t$, and only regions where the number of valid observations in the previous step $\left(B^{(n-1)}_t \le 1\right)$ were replaced with the interpolated values (Equations (6) and (7)). In particular, regions where $B^{(n-1)}_t$ was one, corresponding to areas influenced by a single observation in the previous moving average step, were updated to mitigate the effects of potential outliers. This update further prevents overreliance on a single observation and improves the robustness of the resulting temperature maps. This iterative process (Equations (5)–(7)) was repeated ten times to produce the final smoothed map, $S^{(10)}_t$.

$$\hat{T}_{t,i,j} = \frac{W^{(0)}_{t,i,j}}{B_{t,i,j}} \tag{4}$$

$$W^{(n)}_{t,i,j} = \begin{cases} S^{(n-1)}_{t,i,j}, & if B_{t,i,j} = 0 \\ avg\left(S^{(n-1)}_{t,i,j}, \hat{T}_{t,i,j}\right), & if B_{t,i,j} = 1 \end{cases} \tag{5}$$

$$\hat{B}^{(n)}_{t,i,j} = \sum_{k=-5}^{5} I\left(Y^{(n)}_{t+k,i,j}\right),\ S^{(n)}_{t,i,j} = \frac{\sum_{k=-5}^{5} W^{(n)}_{t+k,i,j}}{\hat{B}^{(n)}_{t,i,j}} \tag{6}$$

$$S^{(n)}_{t,i,j} = \begin{cases} S^{(n)}_{t,i,j}, & \text{if} \hat{B}^{(n-1)}_{t,i,j} \le 1 \\ S^{(n-1)}_{t,i,j}, & \text{else} \end{cases} \tag{7}$$

Standard normalization was applied to $S^{(10)}_t$ using the mean and standard deviation computed for each calendar day. These statistics were derived from ERA5 data over the entire land area of South Korea for each day of the year (days 1–365). The resulting SCM dataset comprises 365 daily spatial anomaly maps (Supplementary Fig. S3). This dataset represents the relative temperature anomalies within the Korean Peninsula for each calendar day, indicating whether a given location exhibited higher or lower temperatures than other regions during that period. Owing to persistent

regional climate patterns, some areas consistently appear warmer or cooler than others during specific seasons.

Air temperature super-resolution using SR-weather

The SR-Weather model in this study was based on the SE-SRCNN proposed by Yasuda et al.[22]. The SE-SRCNN applies skip connections and a squeeze-and-excitation (SE) block-based channel attention mechanism to extract and integrate features individually from low-resolution temperature data and high-resolution auxiliary data to reconstruct high-resolution temperatures. In SE-SRCNN, the low-resolution temperature input is first resampled using bicubic interpolation to match the spatial resolution of the high-resolution auxiliary data before being fed into the model. The resampled low-resolution and auxiliary data were processed separately through convolutional layers, followed by ReLU activation to extract feature maps. These feature maps were then combined, and the channel attention weights were computed using an SE block. The attention weight for each channel is a scalar value indicating its relative importance. Specifically, global average pooling (GAP) is applied to aggregate spatial information within each channel, producing a single scalar per channel. The aggregated values were passed through two fully connected layers with ReLU and sigmoid activations to compute the attention weights. These weights are then multiplied by the original feature maps, enhancing the contribution of informative channels while suppressing less important ones. The weighted feature maps were subsequently passed through another convolutional layer, and a skip connection was employed to add bicubic-interpolated low-resolution data to the output, producing the final super-resolution temperature field.

In SE-SRCNN, GAP is used to aggregate spatial information for channel attention computation. However, because GAP averages spatial information into a single scalar per channel, it cannot capture distinctive localized features or peaks within feature maps[42]. This averaging bias is particularly problematic when salient signals occupy a small spatial support or appear as sharp gradients. To address this limitation, SR-Weather extends the SE-SRCNN architecture by incorporating global max and min pooling in addition to GAP (Fig. 6). For each pooling operator, we computed channel descriptors and fed them into a lightweight two-layer gating network to obtain separate channel-attention maps, which were then fused to produce the final attention. In the maximum and minimum branches, the gates are conditioned only on DEM and SCM, which biases attention toward topographic and climatological controls. This design increases sensitivity to sharp, localized signals while preserving the global context and improving the reconstruction over high-elevation ridges and valley floors.

Comparison models for air temperature super-resolution

HAT integrates a window-based self-attention architecture from the Swin Transformer family with GAP–based channel attention through a hybrid attention block, enabling the joint learning of local and global information[20]. The model enhances receptive field coverage by strengthening the information exchange between adjacent windows using an overlapping cross-attention module and convolution-based positional encoding. High-resolution images were reconstructed using a combination of pixel shuffle-based upsampling and subsequent convolutional refinement. HAT demonstrated state-of-the-art performance in the field of single-image super-resolution (SISR) from 2022 to 2023. In this study, HAT was adopted as a comparison model to benchmark performance in the 25× single-image upscaling task, given its demonstrated superiority in this domain.

SRGAN is a representative super-resolution model that employs a generative adversarial network (GAN) architecture to reconstruct perceptually realistic high-resolution images from low-resolution inputs[21]. The generator expands low-dimensional input features into higher-dimensional representations using multiple residual blocks and pixel-shuffle–based upsampling blocks. The discriminator is trained to distinguish between generated and real high-resolution images, thereby providing feedback that encourages the generator to produce outputs that closely match the distribution of natural images. In this study, the SRGAN was configured similarly to the SE-SRCNN, utilizing auxiliary data for super-resolution, to evaluate the applicability of the GAN framework. Because the high-resolution MODIS AT data used in this study contained missing values, partial convolution filters were applied to the discriminator[43]. This design ensures that missing values do not affect the discriminator's judgement, allowing the generator to focus on restoring realistic textures rather than predicting the missing data.

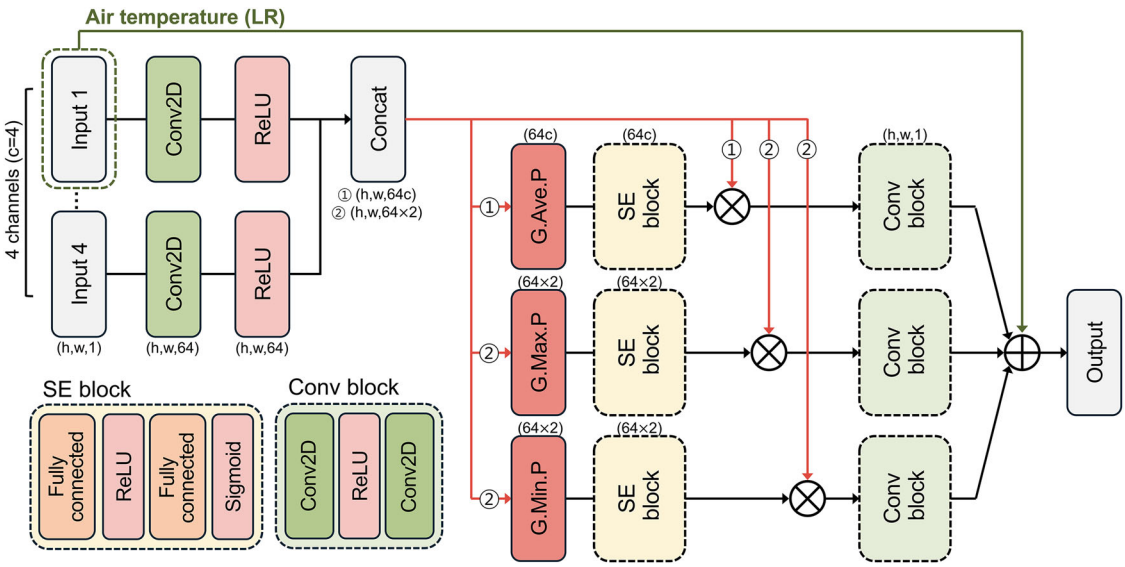

Fig. 6 | Architecture of the SR-Weather model. The model takes bicubic-interpolated low-resolution (LR) air temperature data and high-resolution auxiliary data (DEM, Impervious surface fraction, and SCM) as inputs. The feature maps extracted from LR and auxiliary inputs are concatenated and processed through three separate attention pathways. Global average pooling (G.Ave.P) is applied to the combined feature maps of all inputs (LR temperature, DEM, Impervious ratio, and SCM). In contrast, global max pooling (G.Max.P) and global min pooling (G.Min.P) are applied only to the feature maps of DEM and SCM. Each pathway is followed by an SE block. The resulting attention-weighted feature maps are passed through convolutional blocks and combined with a skip connection from the bicubic-interpolated LR input to produce the final super-resolved temperature output. The figures were generated using Microsoft PowerPoint.

Table 1 | Summary of input variables and patch configurations for 25× super-resolution

	SR-Weather	SE-SRCNN	SRGAN	HAT
Input variables	Bicubic LR, DEM, Imp, SCM	Bicubic LR, DEM, Imp	LR, DEM, Imp	LR
LR patch size	(3 × 3) pre-bicubic	(3 × 3) pre-bicubic	(3 × 3)	(5 × 5)
HR patch size	(75 × 75)	(75 × 75)	(75 × 75)	(125 × 125)
dataset size	39,162	39,162	39,162	10,558

The table lists the variables used as model inputs, the low-resolution (LR) and high-resolution (HR) patch sizes, and the number of training samples for each super-resolution architecture. SR-Weather uses bicubic-upsampled LR temperature fields together with Digital Elevation Model (DEM), impervious surface (Imp), and the seasonal climatology map (SCM). SE-SRCNN uses bicubic-upsampled LR temperature fields together with DEM and Imp. SRGAN uses LR temperature combined with DEM and Imp, whereas HAT relies solely on LR temperature. The LR patch size denotes the spatial dimensions of the model input, whereas the HR patch size represents the dimensions of the model output and target data. The dataset size corresponds to the number of training samples used in each model.

Model settings for each model

All variables were scaled to a range of [0, 1]. For both low- and high-resolution temperature data, standard normalization was first applied using the same procedure as for the SCM, followed by [0, 1] normalization. Table 1 summarizes the input variables and corresponding patch sizes used to achieve a 25× spatial resolution enhancement. For the SE-SRCNN and SR-Weather, low-resolution inputs were resampled using bicubic interpolation to match the dimensions of the high-resolution auxiliary data before being input into the model. For all models except HAT, the low-resolution temperature data were divided into 3 × 3 patches with one-third overlap in both directions (stride = 2 pixels). HAT, a SISR model that relies solely on low-resolution temperature data, can suffer degraded performance when trained using excessively small low-resolution patches[44]. Given the limited availability of satellite-based temperature data owing to operational constraints and weather conditions, low-resolution data for HAT were divided into 5×5 patches. Training patches were selected only when the corresponding high-resolution patch contained more than 100 valid pixels, yielding 10,558 training samples for HAT and 39,162 for the other models. During training, pixels without valid MODIS AT observations were masked out from the loss computation to prevent the model from learning from physically unavailable or uncertain target values.

Inference on FuXi forecasts

We trained SR-Weather on ERA5 inputs and applied it to FuXi forecasts, which may have distributions differing from those of ERA5. This approach follows prior DLWP work, which suggests that forecast errors are relatively insensitive to whether the initial conditions come from operational analyses or the ERA5[36]. To assess the ability to enhance the spatial resolution of forecasts, FuXi 0.25° forecasts from 2020 were provided as inputs to the models trained on the ERA5 0.25° data. The auxiliary data configuration remained identical to that used during training, with 2019 Imp data used to match the latest available land cover conditions before the 2020 forecast period. The input FuXi forecasts were temporally aligned with the target ERA5 data based on forecast initialization and lead times. Daily mean fields from the FuXi model were obtained by averaging the four 6-hourly forecasts within each 24-hour window. Forecast lead times of 1–7 days were evaluated to examine the models' ability to preserve forecast quality across increasing prediction horizons.

No additional preprocessing was applied to the FuXi inputs beyond standard normalization, which is consistent with the training procedure. To ensure consistency in the evaluation, the models were applied in a patch-based inference mode identical to that used during training. The performance was analyzed separately for each lead times, enabling an assessment of how forecast lead times influence the spatial super-resolution capability of the models.

Evaluation metrics and statistical analysis

Model performance was evaluated using RMSE and R^2, computed by comparing the super-resolved temperature outputs with the corresponding high-resolution MODIS AT data or in situ observations, depending on data availability. For visual analysis, spatial distributions of RMSE, R^2, and MBE were calculated for the test period using Equations (8)–(11). These maps, based on the temporal mean values of the super-resolved and reference temperatures (Equation (8)), highlight spatial patterns of model accuracy and systematic bias across the domain. Here, SR denotes the model-predicted high-resolution temperature field, and HR denotes the MODIS AT. D is the set of day-of-year indices for which both SR and HR are valid, t is the day of the year (1–365), and (i, j) are spatial coordinates.

$$\overline{SR}_{i,j} = \frac{1}{|D|}\sum_{t\in D} SR_{t,i,j}, \overline{HR}_{i,j} = \frac{1}{|D|}\sum_{t=1}^{T} HR_{t,i,j} \tag{8}$$

$$\mathrm{RMSE}_{i,j} = \sqrt{\frac{1}{|D|}\sum_{t\in D}\left(HR_{t,i,j} - SR_{t,i,j}\right)^2} \tag{9}$$

$$R^2_{i,j} = 1 - \frac{\sum_{t\in D}\left(HR_{t,i,j} - SR_{t,i,j}\right)^2}{\sum_{t\in D}\left(HR_{t,i,j} - \overline{HR}_{i,j}\right)^2} \tag{10}$$

$$MBE_{i,j} = \overline{SR}_{i,j} - \overline{HR}_{i,j} \tag{11}$$

For a consistent comparison of computational cost, we computed the number of FLOPs per three-dimensional grid cell. Because LDAPS does not publicly disclose FLOPs per time step, we used the WRF CONUS 12-km benchmark as a representative proxy for estimating LDAPS-level complexity. The WRF benchmark reports 22–28.5 × 10^9 FLOPs per time step for a 433 × 308 × 35 grid, corresponding to 4.7–6.1 × 10^3 FLOPs per grid cell per step. With a 1 min integration interval (60 steps per hour), a 36 h LDAPS forecast is therefore approximated to require roughly 1.0–1.3 × 10^7 FLOPs per grid cell.

Data availability

The FuXi 0.25° forecast data were obtained from https://weatherbench2.readthedocs.io/. The ERA5 2 meter temperature (T2M) was from https://cds.climate.copernicus.eu/cdsapp#!/dataset/reanalysis-era5-pressure-levels?tab=form. The MODIS/Terra 1 km Land Surface Temperature (LST) product was downloaded from https://www.earthdata.nasa.gov/data/catalog/lpcloud-mod21a1d-061. The Shuttle Radar Topography Mission (SRTM) Void Filled Global 3 arc-second (2012 release) digital elevation model was from https://earthexplorer.usgs.gov/. MODIS/Terra+Aqua Land Cover Type was from https://www.earthdata.nasa.gov/data/catalog/lpcloud-mcd12q1-061. The Automated Synoptic Observing System (ASOS) and Automatic Weather Station (AWS) were obtained from https://data.kma.go.kr.

Code availability

The codes are available from the corresponding author upon reasonable request. The codes related to the HAT are provided in Chen et al.[18]. The codes related to the SRGAN are described by in Ledig et al.[19]. The codes related to the SE-SRCNN can be found in Yasuda et al.[20].

Received: 19 September 2025; Accepted: 10 January 2026;
Published online: 26 January 2026

References

1. Qian, Y. et al. Urbanization impact on regional climate and extreme weather: Current understanding, uncertainties, and future research directions. *Adv. Atmos. Sci.* **39**, 819–860 (2022).
2. Hsu, A., Sheriff, G., Chakraborty, T. & Manya, D. Disproportionate exposure to urban heat island intensity across major US cities. *Nat. Commun.* **12**, 2721 (2021).
3. Li, Y. et al. Green spaces provide substantial but unequal urban cooling globally. *Nat. Commun.* **15**, 7108 (2024).
4. Watt-Meyer, O. et al. Neural network parameterization of subgrid-scale physics from a realistic geography global storm-resolving simulation. *J. Adv. Model. Earth Syst.* **16**, e2023MS003668 (2024).
5. Stevens, B. et al. DYAMOND: the DYnamics of the Atmospheric general circulation Modeled On Non-hydrostatic Domains. *Prog. Earth Planet. Sci.* **6**, 1–17 (2019).
6. Leutwyler, D., Lüthi, D., Ban, N., Fuhrer, O. & Schär, C. Evaluation of the convection-resolving climate modeling approach on continental scales. *J. Geophys. Res. Atmos.* **122**, 5237–5258 (2017).
7. Prein, A. F. et al. A review on regional convection-permitting climate modeling: Demonstrations, prospects, and challenges. *Rev. Geophys.* **53**, 323–361 (2015).
8. Termonia, P. et al. The CORDEX.be initiative as a foundation for climate services in Belgium. *Clim. Serv.* **11**, 49–61 (2018).
9. Korea Meteorological Administration. *Numerical Data Application Manual* (KMA, Seoul, 2011).
10. Dowell, D. C. et al. The High-Resolution Rapid Refresh (HRRR): An hourly updating convection-allowing forecast model. Part I: Motivation and system description. *Weather Forecast* **37**, 1371–1395 (2022).
11. Baldauf, M. et al. Operational convective-scale numerical weather prediction with the COSMO model: Description and sensitivities. *Mon. Weather Rev.* **139**, 3887–3905 (2011).
12. Dirmeyer, P. A. et al. Verification of land–atmosphere coupling in forecast models, reanalyses, and land surface models using flux site observations. *J. Hydrometeorol.* **19**, 375–392 (2018).
13. Bi, K. et al. Accurate medium-range global weather forecasting with 3D neural networks. *Nature* **619**, 533–538 (2023).
14. Lam, R. et al. Learning skillful medium-range global weather forecasting. *Science* **382**, 1416–1421 (2023).
15. Chen, L. et al. FuXi: A cascade machine learning forecasting system for 15-day global weather forecast. *npj Clim. Atmos. Sci.* **6**, 190 (2023).
16. Mardani, M. et al. Residual corrective diffusion modeling for km-scale atmospheric downscaling. *Commun. Earth Environ.* **6**, 124 (2025).
17. Balsamo, G. et al. Satellite and in situ observations for advancing global Earth surface modelling: A review. *Remote Sens* **10**, 2038 (2018).
18. Meng, Q. et al. GLOSTFM: A global spatiotemporal fusion model integrating multi-source satellite observations to enhance land surface temperature resolution. *Remote Sens. Environ.* **319**, 114640 (2025).
19. Zou, R., Wei, L. & Guan, L. Super resolution of satellite-derived sea surface temperature using a transformer-based model. *Remote Sens* **15**, 5376 (2023).
20. Chen, X., Wang, X., Zhou, J., Qiao, Y. & Dong, C. Activating more pixels in image super-resolution transformer. *2023 IEEE/CVF Conference on Computer Vision and Pattern Recognition (CVPR)*, 22367–22377 (Vancouver, BC, Canada, 2023).
21. Ledig, C. et al. Photo-realistic single image super-resolution using a generative adversarial network. *2017 IEEE Conference on Computer Vision and Pattern Recognition (CVPR)*, 4681–4690 (Honolulu, HI, USA, 2017).
22. Yasuda, Y., Onishi, R., Hirokawa, Y., Kolomenskiy, D. & Sugiyama, D. Super-resolution of near-surface temperature utilizing physical quantities for real-time prediction of urban micrometeorology. *Build. Environ.* **209**, 108597 (2022).
23. Li, S., Wan, H., Yu, Q. & Wang, X. Downscaling of ERA5 reanalysis land surface temperature based on attention mechanism and Google Earth Engine. *Sci. Rep.* **15**, 675 (2025).
24. Liang, M. et al. A high-resolution land surface temperature downscaling method based on geographically weighted neural network regression. *Remote Sens* **15**, 1740 (2023).
25. Weng, Q., Fu, P. & Gao, F. Generating daily land surface temperature at Landsat resolution by fusing Landsat and MODIS data. *Remote Sens. Environ.* **145**, 55–67 (2014).
26. Zhang, T., Zhou, Y., Zhu, Z., Li, X. & Asrar, G. R. A global seamless 1 km resolution daily land surface temperature dataset (2003–2020). *Earth Syst. Sci. Data* **14**, 651–664 (2022).
27. Shi, W. et al. Real-time single image and video super-resolution using an efficient sub-pixel convolutional neural network. *2016 IEEE Conference on Computer Vision and Pattern Recognition (CVPR)*, 1874–1883 (Las Vegas, NV, USA, 2016).
28. Islam, M. A., Kowal, M., Jia, S., Derpanis, K. G. & Bruce, N. D. Global pooling, more than meets the eye: Position information is encoded channel-wise in CNNs. *2021 IEEE/CVF International Conference on Computer Vision (ICCV)*, 793–801 (Montreal, QC, Canada, 2021).
29. Buster, G., Cox, J., Benton, B. N. & King, R. N. Estimating the impacts of increasing temperatures and the efficacy of climate adaptation strategies in urban microclimates with deep learning. *Urban Climate* **64**, 102603 (2025).
30. Yang, Q. et al. Local off-grid weather forecasting with multi-modal Earth observation data. arXiv:2410.12938 (2024).
31. Byun, J. & Paik, K. The development process of the Korean coastal mountain range: Examination from spatial distribution of knickzones. *Prog. Phys. Geogr. Earth Environ.* **45**, 541–563 (2021).
32. Tsai, C. L., Kim, K., Liou, Y. C., Lee, G. & Yu, C. K. Impacts of topography on airflow and precipitation in the Pyeongchang area seen from multiple-Doppler radar observations. *Mon. Weather Rev.* **146**, 3401–3424 (2018).
33. Hwang, Y., Ryu, Y. & Qu, S. Expanding vegetated areas by human activities and strengthening vegetation growth concurrently explain the greening of Seoul. *Landsc. Urban Plan.* **227**, 104518 (2022).
34. Bae, J. S., Joo, R. W. & Kim, Y. S. Forest transition in South Korea: reality, path and drivers. *Land Use Policy* **29**, 198–207 (2012).
35. Yoo, C., Im, J., Park, S. & Quackenbush, L. J. Estimation of daily maximum and minimum air temperatures in urban landscapes using MODIS time series satellite data. *ISPRS J. Photogramm. Remote Sens.* **137**, 149–162 (2018).
36. Wan, Z., Hook, S. & Hulley, G. MODIS/Terra Land Surface Temperature/Emissivity Daily L3 Global 1 km SIN Grid (Version 6.1) [MOD11A1]. NASA EOSDIS Land Processes DAAC (2021). https://doi.org/10.5067/MODIS/MOD11A1.061.
37. Wan, Z. New refinements and validation of the collection-6 MODIS land-surface temperature/emissivity product. *Remote Sens. Environ.* **140**, 36–45 (2014).
38. Rasp, S. et al. Weatherbench 2: A benchmark for the next generation of data-driven global weather models. *J. Adv. Model. Earth Syst.* **16**, e2023MS004019 (2024).
39. Reuter, H. I., Nelson, A. & Jarvis, A. An evaluation of void-filling interpolation methods for SRTM data. *Int. J. Geogr. Inf. Sci.* **21**, 983–1008 (2007).
40. Friedl, M. & Sulla-Menashe, D. MODIS/Terra+Aqua Land Cover Type Yearly L3 Global 500 m SIN Grid (Version 6.1) [MCD12Q1]. NASA EOSDIS Land Processes DAAC (2022). https://doi.org/10.5067/MODIS/MCD12Q1.061.
41. Sulla-Menashe, D., Gray, J. M., Abercrombie, S. P. & Friedl, M. A. Hierarchical mapping of annual global land cover 2001 to present: The MODIS Collection 6 Land Cover product. *Remote Sens. Environ.* **222**, 183–194 (2019).

42. Woo, S., Park, J., Lee, J. Y. & Kweon, I. S. CBAM: Convolutional block attention module. *European Conference on Computer Vision (ECCV)*, 3–19 (Munich, Germany, 2018).
43. Liu, G. et al. Image inpainting for irregular holes using partial convolutions. *European Conference on Computer Vision (ECCV)*, 85–100 (Munich, Germany, 2018).
44. Liang, J. et al. SwinIR: Image restoration using swin transformer. *2021 IEEE/CVF International Conference on Computer Vision (ICCV)*, 1833–1844 (Montreal, QC, Canada, 2021).

Acknowledgements

This work was supported by the National Research Foundation of Korea (NRF) grant funded by the Korea Ministry of Science and ICT (MSIT) (NRF-2022M3K3A1094114 and RS-2025-02310080).

Author contributions

H. Park, S. Park, D. Kang and J.-H. Kim designed the research. H. Park and D. Kang compiled the data. H. Park, S. Park, D. Kang and J.-H. Kim developed the methodology. H. Park, S. Park and D. Kang conducted analyses and prepared the figures. H. Park, S. Park and D. Kang wrote the first draft of the manuscript, and all authors contributed in the writing of the final version of the manuscript.

Competing interests

The authors declare no competing interests.

Additional information

Supplementary information The online version contains supplementary material available at https://doi.org/10.1038/s41612-026-01328-5.

Correspondence and requests for materials should be addressed to Seonyoung Park or Daehyun Kang.

Reprints and permissions information is available at http://www.nature.com/reprints

Publisher's note Springer Nature remains neutral with regard to jurisdictional claims in published maps and institutional affiliations.

Open Access This article is licensed under a Creative Commons Attribution 4.0 International License, which permits use, sharing, adaptation, distribution and reproduction in any medium or format, as long as you give appropriate credit to the original author(s) and the source, provide a link to the Creative Commons licence, and indicate if changes were made. The images or other third party material in this article are included in the article's Creative Commons licence, unless indicated otherwise in a credit line to the material. If material is not included in the article's Creative Commons licence and your intended use is not permitted by statutory regulation or exceeds the permitted use, you will need to obtain permission directly from the copyright holder. To view a copy of this licence, visit http://creativecommons.org/licenses/by/4.0/.

© The Author(s) 2026